Olsen
Heating & Cooling Products

Airco
Heating & Cooling Products

UMLA

Four Position Multipoise Model

UMLVA

Four Position Multipoise Model with ECM

Series A

Oil Fired Warm Air Furnaces

INSTALLATION, OPERATION & MAINTENANCE MANUAL

C SA® US

ECR international
EST. 1928
A Family of Heating & Cooling Brands.

ECR International
2210 Dwyer Avenue, Utica NY 13501
web site: www.ecrinternational.com

P/N 240010964, Rev. G [08/31/2016]

DIMENSIONS

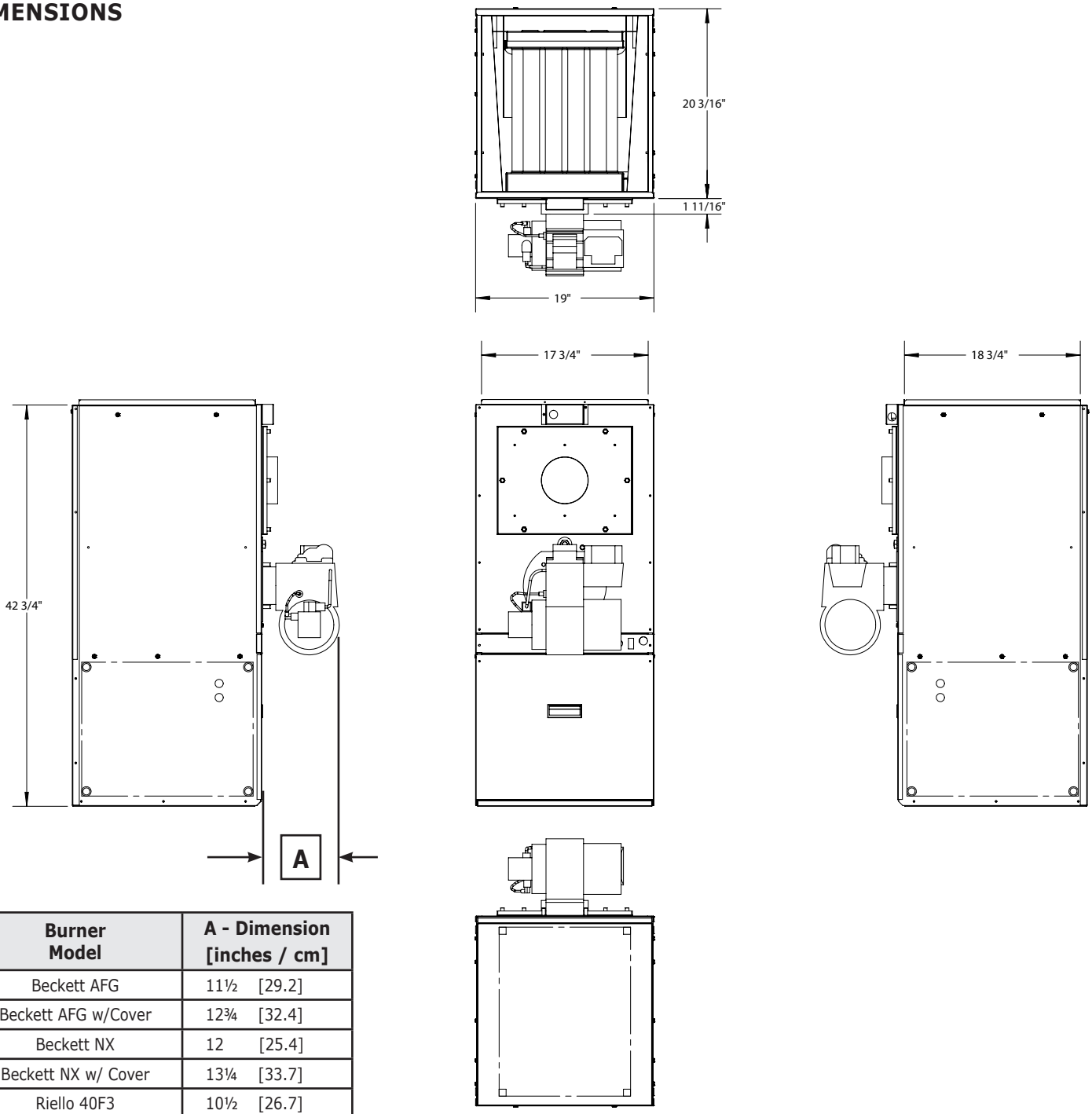

Burner Model	A - Dimension [inches / cm]
Beckett AFG	11½ [29.2]
Beckett AFG w/Cover	12¾ [32.4]
Beckett NX	12 [25.4]
Beckett NX w/ Cover	13¼ [33.7]
Riello 40F3	10½ [26.7]
Riello 40BF3	10⅝ [27.0]
Riello 40BF5	10⅞ [27.6]
Carlin EZ-LF	11¾ [29.8]

Furnace Model	Cabinet			Plenum Openings			Flue Diameter	Filter		Shipping Weight (LB)
	Width	Depth	Height	Supply	Return			Type	Size	
					Side	Bottom				
UMLA/ UMLVA	19"	20 3/16"	42¾"	17¾"W x 18¾"D	14" x 18"	14" x 18"	5"	Permanent	16" x 20" x 1"	188 LB
	48.3 cm	51.3 cm	108.6 cm	45.1 cm x 47.6cm	35.6 cm x 45.7 cm	35.6 cm x 45.7cm	12.7 cm		40.6 cm x 50.8 cm x 2.5 cm	85.5 Kg

1. General 4
2. Safety Symbols 4
3. Introduction Models UMLA/UMLVA 4
4. Heat Loss..... 4
5. Locating the Unit 5
5.1 Upflow Installation 5
5.2 Downflow Installation 5
5.3 Horizontal Installation..... 5
5.3a Non-Suspended Installation 5
5.3b Suspended Installation 5
6. Furnace Used In Conjunction With Air Conditioning..... 6
7. Air Filter 6
8. Ductwork..... 6
9. Combustion and Ventilation Air 7
10. Chimney Venting..... 7
11. Barometric Damper Control 8
12. Optional Direct Venting 8
13a. Fan Timer Board And Limit Control (UMLA) 8
13b. Fan Timer Board And Limit Control (UMLVA) 8
14. Electrical Connections..... 8
15. Humidifier..... 9
16. Piping Installation 9
17. Oil Filter..... 9
18. Oil Burner Nozzles..... 9
19. Oil Burner Adjustment 9
20. Burner Electrodes..... 9
21. Burner Primary (Safety) Control..... 9
22a. Circulating Air Blower (UMLA) 10
22b. Circulating Air Blower (UMLVA).....10
23. Maintenance And Service 10
24. Operating Instructions (UMLA) 11
25. Operating Instructions (UMLVA) 11
Appendix A - Check out and Adjustment.....12
A.1 Oil Burner Air Adjustment 15
A.2 Burner Electrodes 15
A.3 Start Up 16
A.4 Final Check Out 16
Appendix B - Wiring Diagrams.....20
Chimney Vent Furnace Wiring Diagram UMLA/UMLVA 20
Direct Vent Furnace Wiring Diagram UMLA/UMLVA 21
Appendix C -Sequence of Operation and Troubleshooting.....23
C.1 Troubleshooting.....24
C.2 Preliminary Steps: 24
C.3 Check Oil Primary Control 24
Appendix D - Home Owners Reference Table.....28
Parts Listing: Chimney Vent Models UMLA/UMLVA.....29
Parts Diagram.....31

Check our website frequently for updates: www.ecrinternational.com

Information and specifications outlined in this manual in effect at the time of printing of this manual. Manufacturer reserves the right to discontinue, change specifications or system design at any time without notice and without incurring any obligation, whatsoever.

1. General

Furnace installation shall be completed by qualified agency. See glossary for additional information.

⚠ WARNING

Fire, explosion, asphyxiation and electrical shock hazard. Improper installation could result in death or serious injury. Read this manual and understand all requirements before beginning installation.

⚠ WARNING

Fire, burn, asphyxiation hazard. Do not use gasoline, crank case oil, or any oil containing gasoline. Failure to follow these instructions could result in death or serious injury.

2. Safety Symbols

Become familiar with symbols identifying potential hazards.

This is the safety alert symbol. Symbol alerts you to potential personal injury hazards. Obey all safety messages following this symbol to avoid possible injury or death.

⚠ DANGER

Indicates a hazardous situation which, if not avoided, WILL result in death or serious injury

⚠ WARNING

Indicates a hazardous situation which, if not avoided, could result in death or serious injury.

⚠ CAUTION

Indicates a hazardous situation which, if not avoided, could result in minor or moderate injury.

NOTICE

Used to address practices not related to personal injury.

3. Introduction Models UMLA/UMLVA

Models UMLA and UMLVA are oil fired forced air four position multipoise furnaces with an output capacity range of 66,000 BTU/hr to 99,000 BTU/hr.

- UMLA is equipped with 1/2 HP PSC 4 speed blower motor.
- UMLVA is equipped with 1/2 HP ECM variable speed blower motor.
- Furnaces are factory equipped for Chimney venting or factory equipped for direct venting.
- Chimney vent and direct vent models are not field convertible.
- Direct vent installation instructions are included with direct vent models.

Installation shall conform to requirements of authority having jurisdiction or in absence of such requirements:

- Canada - CAN/CSA - B139, Installation Code for Oil-Burning Equipment.
- United States - National Electrical Code, NFPA31, Standard for the Installation of Oil-Burning Equipment.

Models are CSA listed, (NRTL/C) for use with No. 1 (Stove) and No. 2 (Furnace) Oil.

Refer to tables in Appendix A for performance data.

4. Heat Loss

Maximum hourly heat loss for each heated space shall be calculated in accordance with the procedures described in the manuals of:

- Canada - The Heating, Refrigeration and Air Conditioning Institute of Canada (HRAI), or by other means prescribed, or approved by the local authority having jurisdiction.
- United States - Manual J. titled, "Load Calculation" published by the Air Conditioning Contractors of America, describes a suitable procedure for calculating maximum hourly heat loss.

⚠ WARNING

Fire hazard. Do not install furnace on tiled floors or carpeting. Failure to follow these instructions could result in death or serious injury.

5. Locating the Unit - [See Table 1]

- Locate furnace so flue connection to chimney is short, direct and consists of as few elbows as possible.
- Centralize furnace location with respect to supply and return air ductwork. Central location minimizes trunk duct sizing.
- All models may be installed on combustible floors.
- Do not install furnace on carpet or tiled floors.

5.1 Upflow Installation

Maintain all clearances to combustibles. See Table 1.

The furnace is factory assembled for installation in the upflow position. Locate return air opening on either side or base panel of the furnace.

Table 1: Minimum Installation Clearances

Location	Clearance to Combustibles		
	UMLA and UMLVA		
	Upflow	Downflow	Horizontal
Top	N/A	N/A	1" (26 mm)
Bottom	0"	0" **	1" (26 mm)
Plenum Top	1" (26 mm)	2" (52 mm)	1" (26 mm)
Horizontal Duct	1" (26 mm)	2" (52 mm)	1" (26 mm)
Rear	1" (26 mm)	1" (26 mm)	1" (26 mm)
Sides	1" (26 mm)	1" (26 mm)	N/A
Front	18" (458 mm) *	18" (458 mm) *	18" (458 mm) *
Flue Pipe	5" (127 mm)	5" (127 mm)	5" (127 mm)
Flue Pipe to Beckett AFG Cover	2.5" (64 mm)	2.5" (64 mm)	N/A
Flue Pipe to Beckett NX Cover	2.5" (64 mm)	N/A	N/A
Enclosure	Closet	Closet	Closet

* 24" (610 mm) Service Clearance

** When using combustible floor sub base 550003032 for downflow on combustible floor.

5.2 Downflow Installation

Maintain all clearances to combustibles. See Table 1.

When furnace is installed in downflow position on combustible floor, the downflow floor base 550003032 may be used to ensure required clearances. Refer to instructions provided with the base. Return air opening maybe located on either side or base panel (i.e. now at the top in downflow position) of the furnace.

- Rotate furnace 180° to desired position.
- Loosen four (4) nuts fastening oil burner assembly to furnace. Rotate oil burner 180° to normal upright position. Retighten four (4) nuts fastening oil burner assembly to furnace.
- Beckett NX oil burner is not approved for downflow installation when burner is equipped with burner cover.

5.3 Horizontal Installation

Maintain all clearances to combustibles. See Table 1. The furnace may be installed in either of the horizontal positions, warm air discharging left or warm air discharging right. Return air opening may be located on either side or base panel of furnace.

- Rotate furnace 90° to desired position.
- Loosen four (4) nuts fastening oil burner assembly to furnace. Rotate oil burner 90° in the opposite direction to normal upright position. Retighten four (4) nuts fastening oil burner assembly to furnace.
- Beckett AFG and Beckett NX oil burners are not approved for horizontal installation when burner is equipped with burner cover.

5.3a Non-Suspended Installation

- Installation on combustible floor requires 1 inch clearance.
- This can be accomplished by using non-combustible material such as 1 inch thick channel iron or similar material.
- Support furnace to not allow twisting or sagging of cabinet.

5.3b Suspended Installation (See Figure 1)

- Suspend furnace by field fabricating a cradle of angle iron and threaded rod.
- Secure furnace with 2 inch minimum slotted angle or equivalent.
- Support furnace to not allow twisting or sagging of cabinet.
- Position supports to not interfere with accessing blower compartment, burner and limit control.

FIGURE 1: Heat Exchanger Support Screw Location

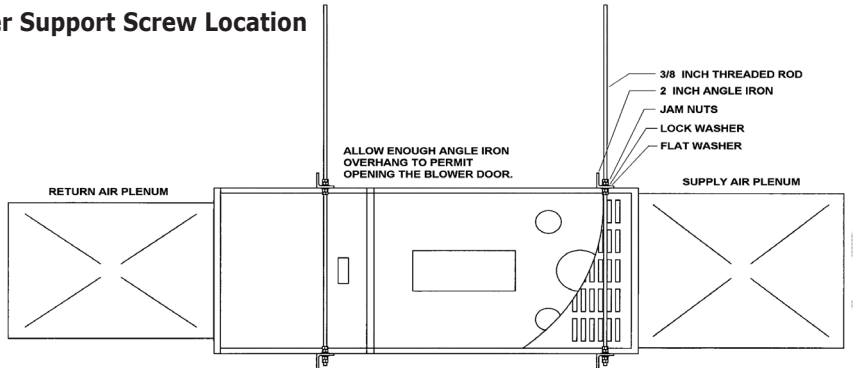

6. Furnace Used In Conjunction With Air Conditioning

- Install furnace in parallel with or upstream from evaporator coil to avoid condensation in heat exchanger.
- When installed in parallel, prevent chilled air from entering furnace by use of dampers or other air controlling means.
- Manually operated dampers must have a control to prevent operation of either system unless dampers are in full heat or full cool position.
- Air heated by the furnace shall not pass through evaporator coil unless coil is specifically approved for such service.
- Check and adjust blower speed to compensate for pressure drop caused by evaporator coil.
- Maintain required clearance between bottom of coil drain pan and top of heat exchanger as specified by coil manufacturer.
- Cased evaporator coils with cases that are slightly larger than the furnace cabinet may be used by employing field fabricated block off plates to close gap between furnace cabinet and coil casing. See Figures 2a and 2b.
- Cased evaporator coils with cases that are smaller than the furnace cabinet should not be used as they will restrict airflow.

7. Air Filter

- Install properly sized air filter on return air side of unit.
- Furnace is supplied with 16" x 20" permanent air filter and filter frame.
- If filter is damaged, replace with filter of same size and type.

8. Ductwork

- Supply and return air ductwork must be designed and installed in accordance with approved methods, local and national codes as well as good trade practices.
- When ductwork supplies air to space other than where furnace is located, return air must be sealed and directed to this space.
- Return air may enter furnace through the right or left side panels or the base panel. Cut out the appropriate 14" x 18" return air opening accordingly. On side panel, remove four (4) 3/4" button plugs to expose 3/4" round holes which define 14" x 18" opening. The base panel has 3/4" square knockouts to define the 14" x 18" return air opening. Take care not to damage wires inside while cutting the opening.
- Mount the furnished filter frame and filter frame end support on the return air opening. See Figure 3.
- Connect return air ductwork to filter frame.
- Use of an appropriately sized prefabricated return air boot (sometimes referred to as a Buffalo boot) equipped with a 16" x 20" filter slot may be used as an option. In this case use the furnished filter frame and filter frame end closer as a transition piece to connect the return air boot to furnace's return air opening. See Figures 4a and 4b.
- Manufacturer recommends installing blower door before handling or moving the unit.

FIGURE 2a: Evaporator Coil

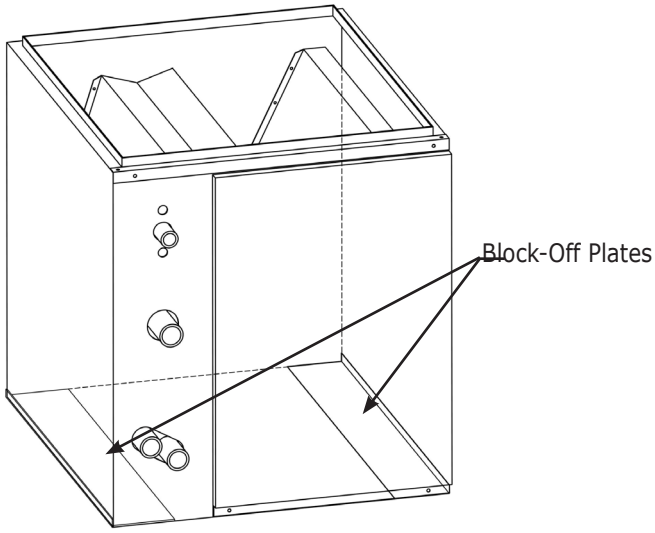

FIGURE 2b: Evaporator Coil Centered Over Narrow Furnace

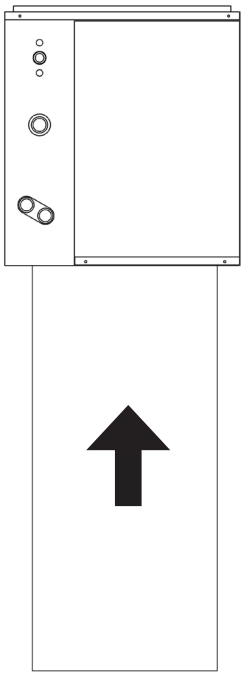

FIGURE 3: Filter Frame and Frame End Support

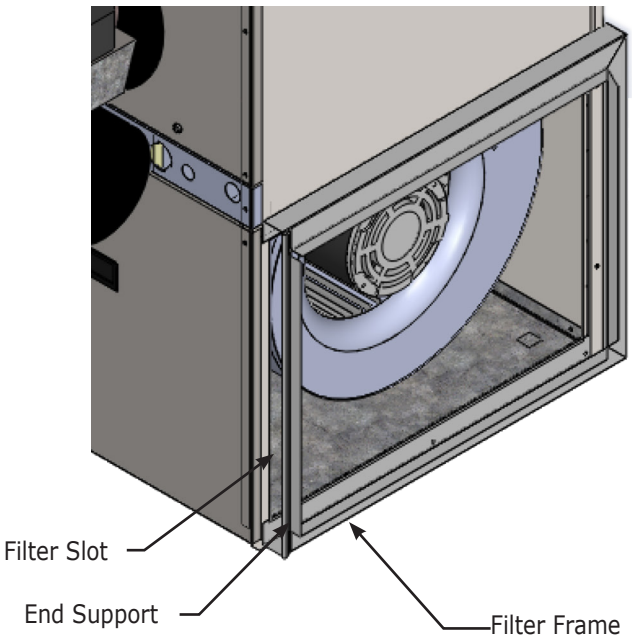

FIGURE 4a: Filter Frame End Closer

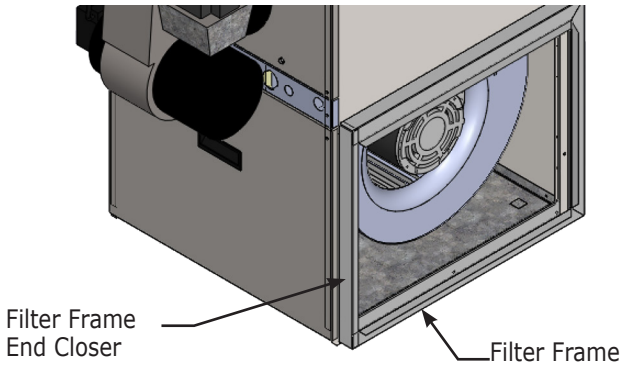

FIGURE 4b: Buffalo Boot Installation

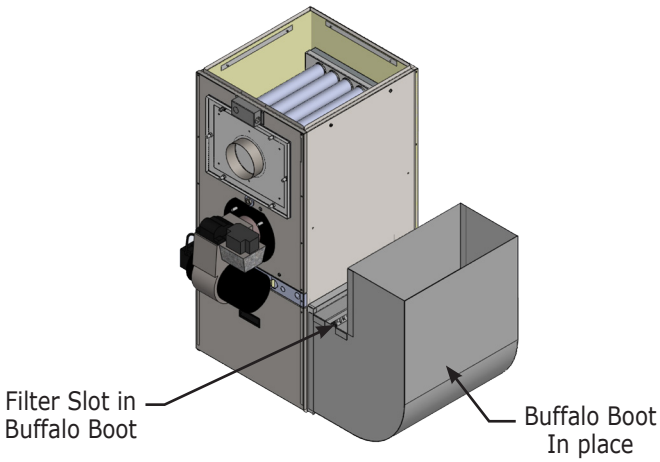

9. Combustion and Ventilation Air

Comply with CSA B139 (Canada) or NFPA 31 (US) standards for the Installation of Oil Burning Equipment and applicable provisions of local building codes to provide combustion and ventilation air.

⚠ WARNING

Failure to provide adequate combustion and ventilation air could result could result in death or serious injury.

⚠ WARNING

Asphyxiation hazard. Chimney vented versions of furnace must be connected to flue having sufficient draft at all times. Failure to follow these instructions could result in death or serious injury.

NOTICE

This furnace is approved for use with Type L vent or equivalent. Maximum vent temperature for Type L vent is 575°F (300°C).

10. Chimney Venting

- Flue pipe should be as short as possible with horizontal pipes sloping upward toward the chimney at a rate of one-quarter inch per foot.
- Flue pipe should not be smaller in cross sectional area than flue collar on the furnace.
- Flue pipe should connect to chimney so the flue pipe extends into, and terminates flush with the inside surface of chimney liner. Seal the joint between pipe and lining.
- Chimney outlet should be at least two feet above highest point of peaked roof.
- All unused chimney openings should be closed.
- Chimneys must conform to local, provincial or state codes, or in the absence of local regulations, to the requirements of the National Building Code.

Manufacturer recommends breech draft of -0.02 in. w.c.

Flue pipe must not pass through any floor or ceiling, may pass through a wall where suitable fire protection provisions have been installed.

- Canada, refer to CAN/CSA B-139 for rules governing the installation of oil burning equipment.
- United States, refer to NFPA 31 for regulations governing the installation of oil burning equipment.

See appendix A for burner set-up.

11. Barometric Damper Control

Barometric damper control, also known as draft regulator, is used on conventional chimney venting only. Control automatically maintains constant negative pressure. Ensures proper pressures are not exceeded. If chimney does not develop sufficient draft, draft control does not function properly.

- Install draft regulator in same room or enclosure as furnace. Draft regulator should not interfere with combustion air supplied to the burner.
- Locate control near furnace flue outlet.
- Install per instructions supplied with regulator.
- Set breech draft to -0.02 in. w.c.

12. Optional Direct Venting

Certain UMLA and UMLVA furnaces are manufactured as direct vent units. Refer to Direct Vent Installation, Operation and Maintenance Manual, part number 240011300, included with direct vent furnace, for details.

Direct venting requires use of specific oil burners, Beckett NX or Riello 40BF3 or 40BF5.

Refer to Appendix A, Tables A-2 and A-4.

13a. Fan Timer Board And Limit Control (UMLA) [See Figure 5, page 16]

Electronic Fan Timer integrates control of burner and circulator fan operations. Control is central wiring point for most of furnace electrical components.

- United Technologies 1158-120 has an adjustable fan on time set by selecting dipswitch combination displayed in Chart 1. Fan on delay can be set at 30, 60, 90 or 120 seconds. Provides a delay between burner ignition and blower start-up to eliminate excessive flow of cold air when blower comes on. Manufacturer recommended fan on delay is 30 seconds for UML100A models and 60 seconds for UML65/80/90A models.
- United Technologies 1158-120 has an adjustable fan off time of 2, 3, 4 or 6 minutes as displayed in Chart 1. Fan off delay time starts when burner motor is de-energized at end of call for heat. Blower shutdown is delayed to remove any residual heat from heat exchanger. Manufacturer recommended fan off delay is 2 minutes.
- Electronic fan timer board works in conjunction with snap disc limit controls, performing a safety function, shutting off burner if furnace over-heats.
- Limit control is thermally operated and automatically resets. Limit control is factory installed, pre-set and is not adjustable.
- If limit control opens with United Technologies 1158-120 electronic fan control, circulating fan will energize. When limit closes, fan off timer begins. At the end of fan off time cycle burner is energized, initiating normal burner cycle.

Chart 1- United Technologies 1158-120 (UMLA)

Dip Switch Position				Blower Delay Times	
1	2	3	4	On Seconds	Off Minutes
Off	Off			30	
On	Off			60	
Off	On			90	
On	On			120	
		Off	Off		2
		On	Off		3
		Off	On		4
		On	On		6

13b. Fan Timer Board And Limit Control (UMLVA) [See Figure 6, page 16]

United Technologies 1168-1 ECM tap board has adjustable fan on/off delay and airflow settings that must be adjusted in accordance with furnace input rating (nozzle size). Refer to Table A-9 for ECM blower set-up.

14. Electrical Connections

- Furnace is listed by Canadian Standards Association under NRTL (North American) Standard.
- All field wiring shall conform to CAN/CSA C22.1 Canadian Electrical Code, Part 1, and by local codes, where they prevail.
- United States, wiring shall conform to National Fire Protection Association NFPA-70, National Electrical Code, and with local codes and regulations.
- Wire furnace to separate dedicated circuit in main electrical panel.
- Suitably located circuit breaker can be used as service switch, separate service switch is advisable.
- Service switch is necessary if circuit breaker is close to the furnace, or furnace is located between circuit breaker and entry to furnace room.
- Clearly mark service switch. Install in accessible area between furnace and furnace room entry. Locate so as to reduce possibility it can be mistaken as light switch or similar device.
- Power requirement for all UML models is: 120 VAC, 1 Ø, 60 Hz., 12A.
- Accessory equipment such as electronic air cleaners and humidifiers may be included on furnace circuit.
- Accessories requiring 120 VAC power sources such as electronic air cleaners and humidifier transformers may be powered from electronic fan timer board where provisions have been made for connections, but should have their own controls.

- Do not use direct drive motor connections as a power source, there is risk of damaging accessories.
- Thermostat wiring connections are shown in wiring diagrams in Appendix B. Some micro-electronic thermostats require additional controls and wiring. Refer to thermostat manufacturer's instructions.
- **ECM Blower note** - Single stage cooling use terminal Y/Y2. Two stage cooling use terminal Y1 for first stage and Y/Y2 for second stage. When Y1 is energized, air flow is reduced by 20%. Do not use terminal Y1 with single stage cooling or heat pump.
- Locate thermostat approximately 5 feet above floor, on inside wall, and where thermostat is exposed to average room temperatures. Avoid locations where thermostat is exposed to cold drafts, heat from nearby lamps and appliances, exposure to sunlight, heat from inside wall stacks, etc.
- Adjust thermostat heat anticipator to amperage draw of heating control circuit as measured at "R" and "W" terminals of thermostat. Do not measure current with thermostat connected to the circuit. Measure amperage by connecting ammeter between two wires which connect to thermostat "R" and "W" terminals.

15. Humidifier

- Humidifier is optional accessory available through most heating supplies outlets.
- Follow humidifier manufacturer's installation instructions
- Protect furnace heat exchanger from water or water droplets from humidifier.
- Do not use direct drive motor connections as source of power for 120 VAC humidifiers and humidifier transformers.

16. Piping Installation

- Install fuel system in accordance with requirements of CAN/CSA B-139, and local regulations.
- United States installation shall conform to NFPA No. 31 and local codes and authorities.
- Use only approved fuel oil tanks, piping, fittings and oil filter.
- Install oil filter as close to burner as possible.
- Refer to instructions and illustrations in oil burner and oil pump instructions shipped with the furnace.

17. Oil Filter

Install oil filter between fuel oil storage tank and oil burner. When using oil burner nozzle smaller than 0.65 U.S. Gallons Per Hour, install additional 7 to 10 micron filter as close as possible to oil burner.

18. Oil Burner Nozzles

Furnaces are certified for multiple firing rates. Furnace may be fired at ideal rate for wide range of structures by manipulating oil burner setup and blower settings. Refer to Table A-1 thru A-9, and furnace rating plate to determine proper combinations. Nozzles for alternate firing rates are included with furnace.

19. Oil Burner Adjustment

- Adjust burner air supply to maintain fuel to air ratio to obtain ideal combustion conditions.
- Lack of air causes "soft" and "sooty" flames, resulting in soot build-up throughout heat exchanger passages.
- Excess combustion air causes bright roaring fire and high stack temperatures resulting in poor fuel efficiency.
- UMLA and UMLVA operate most efficiently with No. 1 smoke spot on Bacharach Scale. Dust will eventually build up on air moving components of oil burner assembly resulting in decreased air supply with potential soot build up in flue gas passageways of heat exchanger. Soot behaves as insulator and impairs good heat transfer. Stack temperature increases, and efficiency decreases. To avoid this problem, adjust the air supply as follows:
  - ◇ *Chimney vented units* - adjust air supply to provide no more than a trace smoke spot on the Bacharach scale.
  - ◇ *Direct vented units* - adjust air supply for zero smoke per the Direct Vent Installation, Operation and Maintenance Manual included with the direct vent furnace.

20. Burner Electrodes

Correct positioning of electrode tips with respect to each other, fuel oil nozzle, and burners is essential for smooth light ups and proper operation.

Refer to oil burner instructions provided with furnace and Appendix A Section A.2 in this manual for electrode specifications.

NOTICE

Do not tamper with furnace controls they are sensitive. If problems persist, call your service contractor.

21. Burner Primary (Safety) Control

Furnace is equipped with primary combustion control, also referred to as burner relay or burner protector relay, which uses a cad cell located in burner housing, to monitor and control combustion.

Dust or combustion residuals can build up on lens of cad cell impairing its response to flame. Check cad cell for cleanliness and proper alignment if primary control frequently shuts down combustion.

⚠WARNING

Fire, burn, asphyxiation hazard. Do not start the burner unless blower access door is secured in place. Failure to follow these instructions could result in death or serious injury.

22a. Circulating Air Blower (UMLA)

- Furnace models are equipped with direct drive blower systems.
- UMLA models are equipped with four speed PSC motors.
- Set blower speed to match installed firing rate and external static pressure per Table A-6.
- Additional blower speed adjustments are not normally required in properly sized extended plenum duct systems. Motor RPM and air CFM delivery will vary automatically to accommodate conditions within usual range of external static pressures typical of residential duct systems.
- Under-sized duct systems may require higher blower speed to obtain system temperature rise.
- Some older duct systems were not designed to provide static pressure. They typically feature special reducing fittings at each branch run and lack block ends on the trunk ducts. These systems may require modification to provide some resistance to the airflow to prevent over-amping of direct drive blower motor. Selecting a lower blower speed may correct this problem.
- Direct drive blower speeds are adjusted by changing "hot" wires to motor winding connections. Refer to wiring diagrams in Appendix B or wiring diagram label affixed to furnace.
- ***Do not move neutral wire (normally white wire) to adjust blower speed.***
- Single blower speed for both heating and cooling modes may be used. Move BLUE wire on fan timer board from HEAT terminal to UNUSED MOTOR LEAD Terminal. Move jumper provided with BLACK wire on fan timer board from UNUSED MOTOR LEAD terminal to HEAT terminal. Move BLACK wire on blower motor to chosen speed tap.
- ***Do not connect power leads between motor speeds. Always connect neutral wire to motor's designated neutral terminal.***
- ***Do not use blower speed wires as source of power to accessories as electronic air cleaners and humidifier transformers. Unused motor taps auto-generate sufficiently high voltages to damage accessory equipment.***

⚠WARNING

Electrical shock hazard. Turn OFF electrical power supply at service panel before opening blower access door. Failure to do so could result in death or serious injury.

22b. Circulating Air Blower (UMLVA)

UMLVA furnace models are equipped with electronically commutated motors (ECM).

Setting Blower Speed and "ON" and "OFF" Timings

Blower speed and on/off time delays are handled by ECM motor programming and are set via dipswitches per Table A-9. Heating airflow rate is SW1 and on/off delay is SW4, both are set according to firing rate. Cooling airflow rate is SW2 and if used is set according to installed cooling capacity. SW3 can be used to adjust airflow rate by (+) or (-) 15%. Features of this ECM variable speed motor are that it will deliver a constant airflow within a wide range of external static pressures, and also includes:

- **Soft Start:** ECM will slowly ramp up to required operating speed. In heating cycle allows heat exchanger to reach operating temperature before set heat speed, minimizes noise and increases comfort.
- **Soft Stop:** At end of heating cycle, ECM will slowly ramp down. Allows increased energy efficiency and reduced noise levels.
- **Dehumidification:** Dehumidification feature is programmed into the variable speed motor. At start of each cooling cycle, variable speed motor will run at 82% of rated airflow for 7.5 minutes. After 7.5 minutes has elapsed, motor will increase to 100% of rated airflow. Used to provide dehumidification and improve system efficiency.
- **Continuous Fan Operation:** When thermostat continuous fan (G) switch is on without call for heating or cooling, indoor fan is immediately energized at 50% of cooling speed. Allows continuous circulation of air between calls for heating or cooling. If call for heat (W) or cool (Y) occurs during continuous fan, blower remains energized.

23. Maintenance And Service

Routine Maintenance By Home Owner

- Arrange for professional servicing of furnace by the service or installation contractor annually.
- Homeowner is to maintain air filter or filters. A dirty filter can cause furnace to over-heat, fail to maintain indoor temperature during cold weather, increase fuel consumption and cause component failure.
- Inspect, clean or replace filter monthly.
- Furnace is supplied with semi-permanent type filter. If filter is damaged, replace with filters of same size and type.
- During monthly filter inspection, inspect general condition of furnace. Watch for signs of oil leaks in vicinity of oil burner, soot forming on any external part of furnace, soot forming around joints in vent pipe, etc. If any of these conditions are present, please advise your service or installation contractor.

Annual Service By Contractor

- Inspect heat exchanger periodically and clean if necessary.

⚠WARNING

Electrical shock hazard. Turn OFF electrical power supply at service panel before service or maintenance Failure to do so could result in death or serious injury.

- If cleaning is necessary, shut off oil supply, shut off power to the furnace and remove burner.
- Remove flue collar and turbulators.
- Wire brush can be used to loosen dirt and debris on the inside surfaces of heat exchanger. Clean out all accumulated dirt, soot and debris with a wire handled brush and industrial vacuum cleaner.
- Clean and reinstall turbulators.
- Before replacing flue collar, inspect gaskets. If gasket is broken, remove remnants and replace with new gaskets. Replace flue collar.
- Blower motor is factory oiled and permanently sealed. Do not lubricate. Excess oil causes premature electric motor failure.
- Inspect blower fan. Clean if necessary.
- Oil Burner Maintenance: Follow oil burner manufacturer instructions.
- Change oil burner nozzle and oil filter annually.
- Clean and inspect venting system for signs of deterioration and leakage. Replace pitted or perforated vent pipe and fittings.
- Barometric damper should open and close freely.
- Check electrical connections to ensure tight connections. Safety controls such as the high limit controls should be tested for functionality.
- Check fan control to ensure fan on and off delay function continues to start and stop blower fan at optimal settings.
- Check operation of limit switch.

24. Operating Instructions (UMLA)

Before Lighting

1. Open all supply and return air registers and grilles.

⚠WARNING

Fire, burn, explosion, asphyxiation hazard.

- Do not start burner when excess oil has accumulated, furnace is full of vapor, or combustion chamber is very hot.
- Do not burn garbage or paper in furnace.
- Do not leave paper or rags around furnace.

Failure to follow these instructions could result in death or serious injury.

2. Open all valves in oil pipes.
3. Turn on electric power supply

To Light Unit

1. Set thermostat above room temperature to call for heat. Burner should start. It may be necessary to press RESET button on primary combustion control relay.
2. There is a fan on time delay before circulating fan is energized. United Technologies 1158-120 has adjustable fan on time set by selecting dipswitch combination displayed in Chart 1. Fan on delay can be set at 30, 60, 90 or 120 seconds. Manufacturer recommended fan on delay is 30 seconds for UML100A models and 60 seconds for UML65/80/90A models.
3. Set thermostat below room temperature. Oil burner stops.
4. Air circulation blower continues to operate until time off setting selected on electronic fan timer control times out. United Technologies 1158-120 has adjustable fan off time of 2, 3, 4 or 6 minutes. Manufacturer recommended fan off delay is 2 minutes for all models. Fan timer control adjustments may be altered if air at room registers is high upon blower start up or shutdown.
5. Restore thermostat setting to comfortable temperature.

NOTICE

If furnace is to be shut down for extended period of time, close oil supply valve to burner.

To Shut Down Unit

1. Set thermostat to lowest possible setting.
2. Set manual switch (if installed) in electrical power supply line to "OFF".

25. Operating Instructions (UMLVA)

Before Lighting

1. Open all supply and return air registers and grilles.
2. Open all valves in oil pipes.
3. Turn on electric power supply.

To Light Unit

1. Set thermostat above room temperature to call for heat. Burner should start. It may be necessary to press RESET button on primary combustion control relay.
2. There is a fan on time delay before circulating fan is energized. United Technologies 1168-1 has adjustable fan on/off time delay programmed into ECM motor, and is set by selecting SW4 DIP switch combination displayed in Table A-9. Adjust Fan on/off delay according to input (nozzle size).
3. Set thermostat below room temperature. Oil burner stops.
4. Air circulation blower continues to operate until blower off delay setting programmed into ECM motor times out.

NOTICE

If furnace is to be shut down for extended period of time, close oil supply valve to burner.

To Shut Down Unit

1. Set thermostat to lowest possible setting.
2. Set manual switch (if installed) in electrical power supply line to "OFF".

Check out and adjustments

UMLA and UMLVA furnaces may be used with following oil burners.

Beckett AFG and Riello 40F3 and Carlin EZ-LF oil burners are for chimney vent applications using indoor air for combustion only.

Beckett NX and Riello 40BF3/40BF5 oil burners are for direct vent applications using outdoor air for combustion only.

Settings shown below are for initial startup only. Final adjustments shall be made using combustion test instruments.

Table A-1 Beckett AFG Oil Burner Set-Up

Beckett AFG Series Oil Burners (For use with chimney vented units only)							
Furnace Model	**Output BTU/Hr**	**Burner Model**	**Delavan Nozzle**	**Pump Pressure [PSIG]**	**Flow Rate [USGPH]**	**Head**	**Air Setting**
UML65A UMLV65A	66,000	AFG70MPSS	0.50 / 45°W	140	0.55	L2	4
UML80A UMLV80A	77,000	AFG70MPSS	0.50 / 45°W	175	0.65	L2	5
UML90A UMLV90A	88,000	AFG70MPSS	0.60 / 60°W	175	0.75	L2	7
UML100A UMLV100A	99,000	AFG70MPSS	0.65 / 60°W	175	0.85	L2	8

Table A-2 Beckett NX Oil Burner Setup

Beckett NX Series Oil Burners (For use with direct vent units using outdoor combustion air only)							
Furnace Model	**Output BTU/Hr**	**Burner Model**	**Delavan Nozzle**	**Pump Pressure [PSIG]**	**Flow Rate [USGPH]**	**Low Firing Rate Baffle**	**Air Setting**
UML65ANXU UMLV65ANXU	66,000	NX56LQ	0.50 / 60°W	140	0.55	Yes	3
UML80ANXU UMLV80ANXU	77,000	NX56LQ	0.50 / 60°W	175	0.65	Yes	3.25
UML90ANXU UMLV90ANXU	88,000	NX56LQ	0.60 / 60°W	175	0.75	No*	3.25
UML100ANXU UMLV100ANXU	99,000	NX56LQ	0.65 / 60°W	175	0.85	No*	3.75

* Burner is factory equipped with low firing rate baffle. Remove for 0.75 and 0.85 USGPH firing rates.

Table A-3 Riello 40F3 Burner Set-Up

Riello 40F3 Series Oil Burners (For use with chimney vented units only)							
Furnace Model	**Output BTU/Hr**	**Burner Model**	**Delavan Nozzle**	**Pump Pressure [PSIG]**	**Flow Rate [USGPH]**	**Head Setting**	**Air Setting**
UML65ARF UMLV65ARF	66,000	40F3 VSBT	0.50 / 90°B	125	0.55	0	1.6
UML80ARF UMLV80ARF	77,000	40F3 VSBT	0.55 / 80°B	140	0.65	0	2.1
UML90ARF UMLV90ARF	88,000	40F3 VSBT	0.65 / 80°B	133	0.75	1	2.5
UML100ARF UMLV100ARF	98,000	40F3 VSBT	0.75 / 80°B	128	0.85	2	3

Table A-4 Riello 40BF Burner Set-Up

Riello 40BF3/40BF5 Series Oil Burners (For use with direct vent units using outdoor combustion air only)							
Furnace Model	**Output BTU/Hr**	**Burner Model**	**Delavan Nozzle**	**Pump Pressure [PSIG]**	**Flow Rate [USGPH]**	**Turbulator Setting**	**Air Setting**
UML65ARBU UMLV65ARBU	66,000	40BF3	0.50 / 90°B	125	0.55	0.0	4.25
UML80ARBU UMLV80ARBU	77,000	40BF3	0.55 / 80°B	140	0.65	1.0	5.25
UML90ARBU UMLV90ARBU	88,000	40BF5	0.65 / 80°B	140	0.75	0.0	3.75
UML100ARBU UMLV100ARBU	99,000	40BF5	0.75 / 80°B	130	0.85	0.0	4.25
Note: Riello 40BF3 burner is required for 0.55 and 0.65 USGPH firing rates. Riello 40BF5 burner is required for 0.75 and 0.85 USGPH firing rates.							

Table A-5 Carlin EZ-LF Oil Burner Set-Up

Carlin EZ-LF Series Oil Burners (For use with chimney vented units only)								
Furnace Model	**Output BTU/Hr**	**Burner Model**	**Delavan Nozzle**	**Pump Pressure [PSIG]**	**Flow Rate [USGPH]**	**Air Band**	**Head Bar**	**Air Setting**
UML65AC UMLV65AC	66,000	EZ-LF	0.50 / 70°B	125	0.55	Single Slot	0.60 / 0.65	35%
UML80AC UMLV80AC	78,000	EZ-LF	0.50 / 70°B	170	0.65	Single Slot	0.60 / 0.65	65%
UML90AC UMLV90AC	88,000	EZ-LF	0.65 / 70°B	135	0.75	Two Slot*	0.75	45%
UML100AC UMLV100AC	99,000	EZ-LF	0.65 / 70°B	170	0.85	Two Slot*	0.85 / 1.00	45%
* Burner is factory equipped with single slot air band. Replace with furnished two slot air band for 0.75 and 0.85 USGPH firing rates.								

A.1 Oil Burner Air Adjustment

Consult oil burner instructions provided in furnace documents envelope for specific information concerning burner adjustments, operation and troubleshooting.

Beckett AFG Burner (Chimney Vent)

Adjust air band by loosening locking screw. Re-tighten locking screw after adjustment.

Beckett NX Burner (Direct Vent)

Loosen splined nut on nozzle line one turn. Turn adjustment screw clockwise to increase air and counterclockwise to decrease air. Tighten splined nut after obtaining proper setting.

Riello 40F3 Burner (Chimney Vent)

Combustion air is adjusted by removing burner cover. Loosen screws that secure air adjustment plate. Move adjusting plate to either increase or decrease combustion air. When proper air setting is achieved, re-tighten fixing screws. Re-install cover.

Riello 40BF Burner (Direct Vent)

Combustion air can be adjusted with burner cover on. Remove plastic cover on top right hand side of burner cover. With Phillips head screwdriver turn adjustment screw clockwise to increase air or counterclockwise to decrease air. When combustion air is set, reinsert plastic cover.

Carlin EZ-LF (Chimney Vent)

Adjust air band by loosening locking screw. Re-tighten locking screw after adjustment.

A.2 Burner Electrodes

Adjustment of electrode tips with respect to each other, nozzle, burner head is very important to ensure smooth start-ups and to permit efficient combustion.

Beckett AFG

- Electrode gap: 5/32 inch.
- Distance above horizontal center-line: 1/4 inch.
- Distance ahead of nozzle: 1/8 inch.
- "Z" dimension, distance from front of end cone (head) to face of nozzle should be 1-3/4 inch.

Beckett NX

- Electrode gap: 5/32 inch
- Distance above horizontal center line: 1/4 inch.
- Distance ahead of nozzle: 3/32 inch
- Check/adjust zero calibration per Beckett NX oil burner manual supplied with furnace.

Riello Burners

- Electrode gap: 5/32 inch.
- Distance above horizontal center-line: 13/64 inch.
- Distance ahead of nozzle: 5/64 to 7/64 inch.

Carlin Burners

- Electrode gap: 1/8 inch to 5/32 inch.
- Distance above horizontal center-line: 5/16 inch.
- Distance ahead of nozzle: Flush to 1/16 inch.

A.3 Start Up

Use following instructions to set the burner:

1. Shut off electrical power to the furnace.
2. Install oil pressure gauge to pressure port on oil pump. (Refer to oil pump specification sheet included with burner instructions).
3. Restore electrical power to furnace.
4. Start furnace and bleed all air from fuel oil lines.
5. Close purge valve and fire the unit.
6. Allow furnace to warm up to normal operating temperatures. During this time, set pump pressure in accordance with data provided in Appendix A, Table A-1 thru A-5.
7. ***Chimney vented units*** - Drill 1/4" test port in venting between furnace flue outlet and draft regulator (barometric damper) to take smoke readings.
8. ***Direct vented units*** - Do not drill. Use test port in furnished appliance connector to take smoke readings.
9. When furnace has reached "*steady state*" (after approximately 10 minutes), set combustion air damper to get TRACE of smoke for chimney vented units and ZERO smoke for directed vented units.
10. Check system temperature rise. *Temperature rise is the difference between return air temperature measured at a point near return air inlet, and supply air temperature measured near furnace outlet*.

    System temperature rise is listed on furnace rating plate. If temperature rise is too high, airflow must be increased. If temperature rise is too low, slow fan down.
11. ***Chimney vented units -*** after air adjustments have been completed, recheck the breech draft. Breech draft should be adjusted to -0.02 inches w.c.
12. Turn burner off. Observe duct thermometer in supply air stream, note temperature blower fan stops. Fan adjustments can be made by moving dipswitch settings on timer control board for fan off delay.
13. Check operation of limit switch.
    A. Shut off power to furnace.
    B. Temporarily remove neutral wire from PSC blower motor or remove 5 pin power connector from ECM blower motor. Isolate AC line voltage pins on 5 pin power connector with electrical tape to prevent electric shock hazard.
    C. Restore electrical power to furnace.
    D. Set thermostat above room temperature.
    E. After two or three minutes of burner operation, limit control should turn burner off.
    F. When limit function test is complete, shut off electrical power to furnace, replace neutral wire to PSC blower motor or 5 pin power connector to ECM blower motor. Restore power.
    G. Blower fan will start up immediately. Once temperature has dropped and limit control has reset, fan will operate until fan off time is reached.
    H. Oil burner will resume operation and continue until thermostat is satisfied.
    I. Restore thermostat setting to comfortable temperature.
14. Set heat anticipator adjustment in thermostat (if so equipped), by removing "R" or "W" wire to thermostat. Read amperage draw between the two wires. Failure to remove one of the wires from thermostat while performing this test could burn out heat anticipator. Set heat anticipator to amperage measured.
15. Run furnace through at least three full cycles before leaving the installation, to ensure all controls are operating properly.
16. ***Direct vented units*** - check all joints in positive pressure venting system for leaks before leaving installation site.

A.4 Final Check Out

Verify all safety devices and electrical components have been set for normal operation.

Verify all electrical connections are tight and wiring is secure.

Verify homeowner is informed and understands:

- Where circuit breaker or fuse is located in main electrical panel.
- Where furnace switch is located, and switch "on" and "off" positions if not obvious.
- Where oil shut-off valve from oil storage tank is located.
- Thermostat operation, and other related accessories.
- How to operate manual reset button on primary control, and when not to push the reset button.
- How and where to visually inspect venting system for leaks or other problems.
- How to inspect, clean and replace air filter, and other homeowner maintenance procedures.
- Who to call for emergency service and routine annual service.

FIGURE 5: UNITED TECHNOLOGIES 1158-120 FAN TIMER BOARD (UMLA)

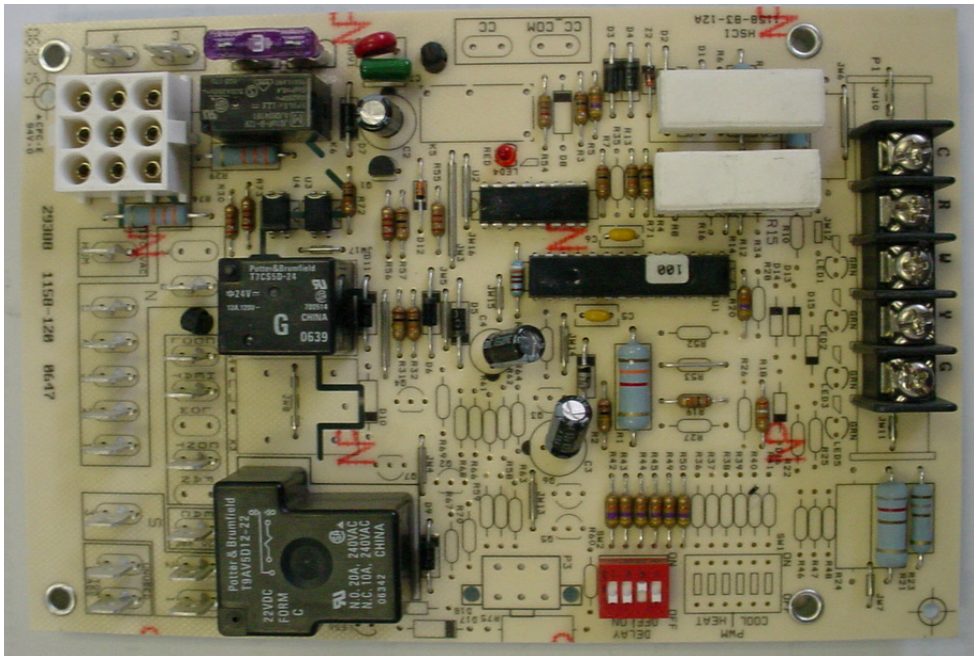

FIGURE 6: UNITED TECHNOLOGIES 1168-1 ECM TAP BOARD (UMLVA)

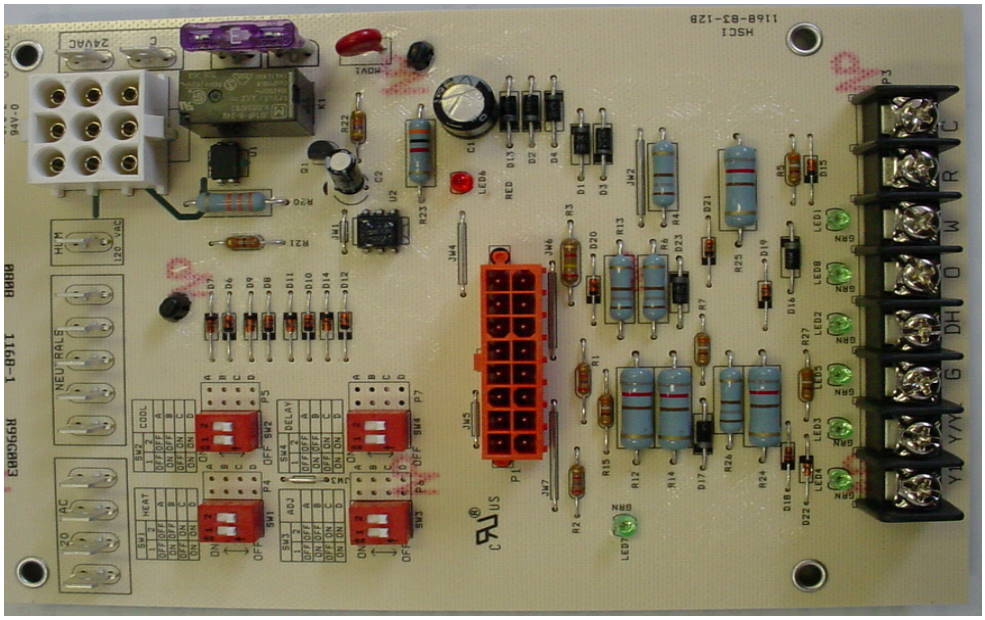

Table A-6 Direct Drive Blower Motor Setup - 1/2 HP PSC Motor

Furnace Model	Blower	Blower Set-Up		Cooling Capacity	
		0.20 in. w.c.	0.50 in. w.c.	Tons	CFM Range
		Speed	Speed		
UML65A	100-10T DD	Medium Low	Medium Low	3	738-1339
UML80A	100-10T DD	Medium Low	Medium Low	3	738-1339
UML90A	100-10T DD	Medium High	High	3	738-1339
UML100A	100-10T DD	Medium High	High	3	738-1339

Table A-7 Direct Drive Blower Characteristics - 1/2 HP PSC Motor

Furnace Model	Blower	Motor FLA	ΔT	Speed	CFM				
					External Static Pressure – Inches w.c.				
					0.20	0.30	0.40	0.50	0.60
UMLA 65 – 100	100-10T DD	7.1	45-75 °F	High	1618	1519	1432	1339	1235
				Med-High	1504	1433	1340	1241	1132
				Med-Low	1110	1080	1027	972	882
				Low	795	781	767	738	723

Table A-8 Direct Drive Blower Characteristics ECM Motor

Furnace Model	Blower	Motor HP	Motor FLA	ΔT	CFM RANGE		
					Continuous Fan	Heating	Cooling
						0.20 - 0.50 inches w.c.	0.5 inches w.c.
UMLVA 65 – 100	100-10T DD	1/2 HP ECM	7.7	45-75 °F	300 - 600	500 - 1500	510-1380

TIP

Formulas will assist with design of duct-work and determination of air flow delivery.
CFM = Bonnet Output / (1.085 x System Temperature Rise (ΔT)
System Temperature Rise (ΔT) = Bonnet Output / (1.085 x CFM)

Table A-9 ECM Blower Set-Up (UMLVA)

Dip Switch Adjustment Chart

For Input 0.55 USGPH TO 0.85 USGPH

SW1 - HEAT DIP Switch Position		POS.	INPUT USGPH
1	2		
OFF	OFF	A	0.65
ON	OFF	B	0.85
OFF	ON	C	0.75
ON	ON	D	0.55

SW2 - COOL DIP Switch Position		POS.	AC Size (TON)
1	2		
OFF	OFF	A	3
ON	OFF	B	2.5
OFF	ON	C	2
ON	ON	D	1.5

SW3 - ADJUST DIP Switch Position		POS.	CFM
1	2		
OFF	OFF	A	0%
ON	OFF	B	(+)15%
OFF	ON	C	(-)15%
ON	ON	D	N/A

SW4 - DELAY DIP Switch Position		POS.	INPUT USGPH
1	2		
OFF	OFF	A	0.65
ON	OFF	B	0.85
OFF	ON	C	0.75
ON	ON	D	0.55

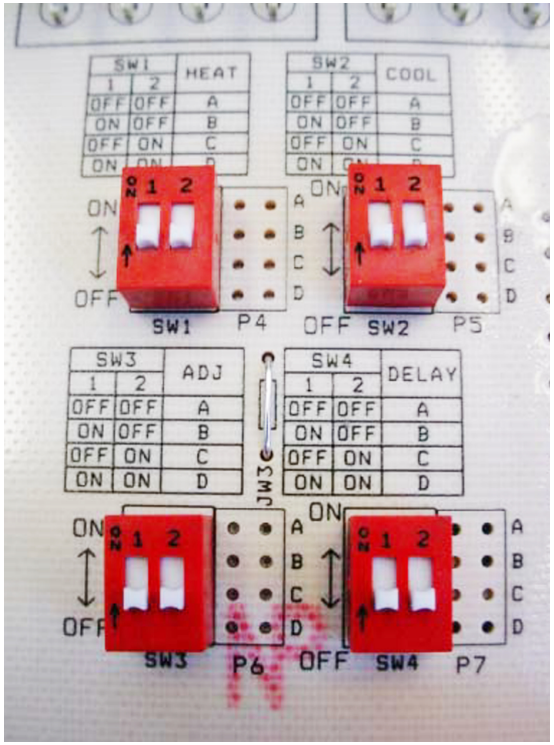

NOTE:

SW1 (HEAT) AND SW4 (DELAY) DIP SWITCHES MUST BOTH BE ADJUSTED ACCORDING TO INPUT (NOZZLE SIZE).

SW2 (COOL): 1 TON is approximately equal to 400 CFM

SW3 (ADJUST): (Heating Mode) Increase OR decrease temperature rise respectively

(Cooling Mode) Increase OR decrease CFM respectively

Chimney Vent Furnace Wiring Diagram UMLA/UMLVA

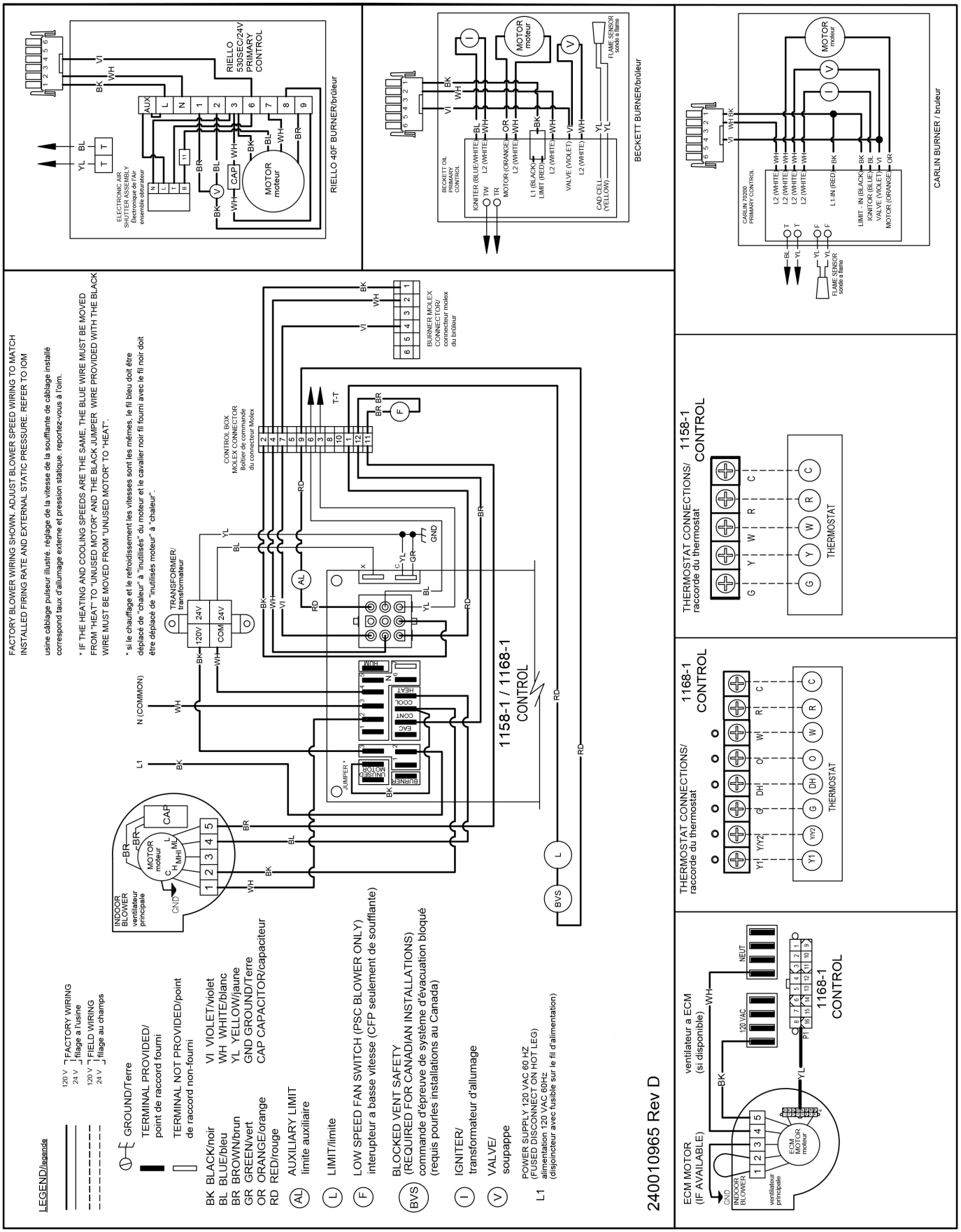

Direct Vent Furnace Wiring Diagram UMLA/UMLVA

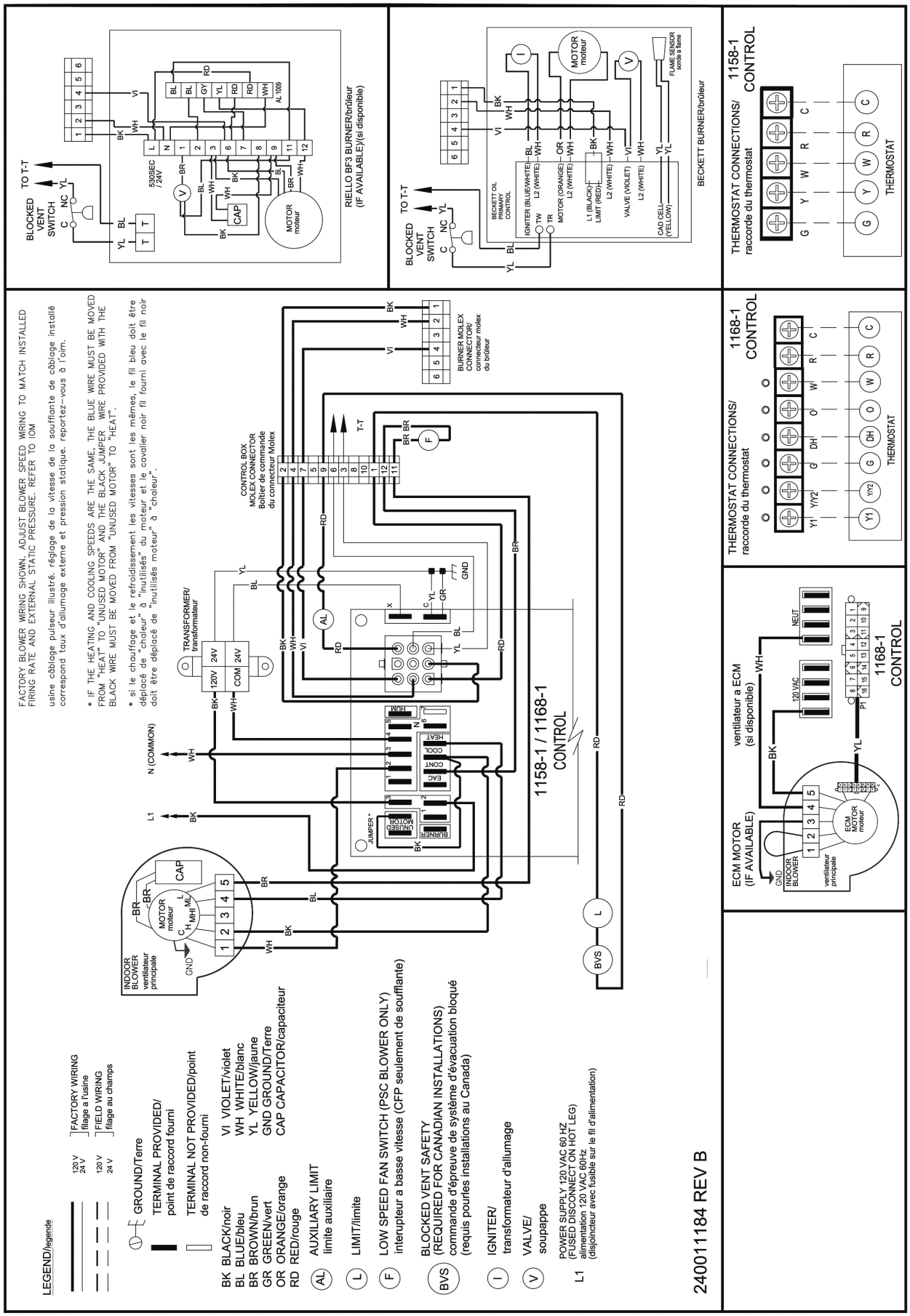

Table C-1: 1158-120 Electronic Fan Timer Board (EFT) Detailed Sequence Of Operation (UMLA)

Mode	Action	System Response
HEAT	Thermostat calls for heat. ("W" terminal is energized).	EFT closes the oil primary control T - T connections. Ignition system and the oil primary control start the furnace. Oil flows as long as the oil primary control senses flame. Burner motor is energized and heat "fan on" delay timing begins. When timing is complete, the circulator fan is energized at heat speed.
	Thermostat ends call for heat. ("W" terminal is de-energized).	The oil primary control is de-energized, terminating the burner cycle. Heat "fan off" delay timing begins. Length of delay depends on EFT dipswitch settings. When timing is complete, the circulator fan is de-energized. EFT returns to standby mode, (Oil primary control and circulator fan are off, unless continuous fan operation is selected at the thermostat).
	Burner fails to light.	Oil primary control locks out within lockout timing, (15 seconds). Burner motor is de-energized. (Even though thermostat is still calling for heat). If circulator fan has started, it continues through the selected heat "fan off" delay period.
	Established flame fails.	Burner motor is de-energized and oil primary control goes into recycle mode. If the selected heat "fan off" delay timing is longer than the recycle delay timing, the circulator fan continues to run through the next trial for ignition.
COOL	Thermostat begins call for cool. (G and Y terminals are energized).	Cooling contactor is energized immediately. Circulator fan is energized at cool speed.
	Thermostat ends call for cool. (G and Y terminals are de-energized).	Cooling contactor is de-energized immediately. Circulator fan turns off immediately.
FAN	Thermostat begins call for fan. (G terminal is energized).	Circulator fan is energized immediately at cooling speed.
	Thermostat ends call for fan. (G terminal is de-energized).	Circulator fan is de-energized immediately.
LIMIT	Limit switch string opens.	Oil primary control shuts off burner. Circulator fan is energized immediately at heat speed. EFT opens the oil primary control T - T connections. Circulating fan runs as long as limit string stays open. If there is a call for cooling or fan, the circulating fan switches from heating to cooling speed.
	Limit switch string closes (with existing call for heat).	EFT begins heat "fan off" delay sequence. Circulating fan turns off after the selected heat "fan off" timing. EFT re-closes the oil primary control T - T connections. Oil primary control is energized, initiating burner light off.
	Limit switch string closes (without existing call for heat).	Circulator fan turns off when heat "fan off" delay time is complete. Normal operation resumes; EFT control is in standby mode awaiting next thermostat command.
FAN	Continuous circulating fan is connected.	Circulating fan is energized when there is no call for heat, cool, or fan. If fan operation is required by a call for heat, cool, or fan, the EFT switches off the continuous fan speed tap before energizing the other fan speed.
EAC	Electronic Air Cleaner is connected.	Electronic air cleaner (EAC) connections are energized when the heat or cool speed of the circulator fan is energized. EAC connections are not energized when the optional continuous fan terminal is energized.

Table C-2: 1168-1 ECM Tap Board Sequence of Operation (UMLVA)

Thermostat Input LEDs (LED 1-5, LED 8)

Six green LEDs are placed behind their respective thermostat connections (Y1, Y/Y2, G, DH, O, W) and illuminate whenever a call is present.

HUM	Humidity control is connected.	Humidifier connections are energized when the oil burner motor is energized.
Mode	**Action**	**System Response**
HEAT	Thermostat call for heat "W"	The 24 VAC input signal is passed to pin 2 of P1 and will drive the K1 relay that provides dedicated contacts to the T-T input of the oil primary control. Blower runs on heating speed profile.
COOL	Thermostat calls for single stage cooling or second stage of two stage cooling "Y/Y2"	The 24 VAC input signal is passed to pin 14 of P1. Blower runs on cooling speed profile.
	Thermostat calls for first stage of two stage cooling "Y1" while "Y/Y2" is not calling	The 24 VAC input signal is passed to pin 6 of P1. Blower runs at 80% of cooling speed profile.
FAN	Thermostat calls for fan "G"	The 24 VAC input signal is passed to pin 15 of P1. Blower runs at continuous low speed profile which is 50% of cooling speed.
DEHUMID	Thermostat calls for Dehumidification "DH"	The 24 VAC input signal is passed to pin 10 of P1. Blower runs according to "Y1" and "Y/Y2" calls as noted above.
REVERSING VALVE	Thermostat calls for reversing valve "O"	The 24 VAC input signal is passed to pin 9 of P1. Blower runs according to "Y1" and "Y/Y2" calls as noted above.

C.1 Troubleshooting

⚠WARNING

Electrical shock hazard. Only a trained, experienced service technician should perform troubleshooting procedure. Failure to do so could result in death or serious injury.

C.2 Preliminary Steps:

Consult Beckett or Riello instruction manuals provided with oil burner for specific information regarding oil burner primary control sequence of operation, diagnostics and troubleshooting.

Check diagnostic light for indications of burner condition.

NOTICE

When simulating call for heat at oil primary control, disconnect at least one thermostat lead wire from T - T terminals to prevent damage to thermostat. Neglecting this procedure may burn out heat anticipator of standard 24 vac thermostat, or cause harm to components within micro-electronic thermostat.

Before checking oil primary control, perform these preliminary checks, repair or replace controls as necessary:

- Check power supply, fuse box or breaker, any service switches, all wiring connections, and burner motor reset button (if equipped).
- Check limit switches to ensure switch contacts are closed.
- Check electrode gap and position.
- Check contacts between oil primary control and electrodes.
- Check oil supply (tank gauge).
- Check oil nozzle, oil filter, and oil valves.
- Check piping or tubing to oil tank.
- Check oil pump pressure.

C.3 Check Oil Primary Control

If the trouble does not appear to be in the burner or ignition hardware, check the oil primary control per manufacturer's instructions included with oil burner.

⚠WARNING

Electrical shock hazard. Only a trained, experienced service technician should perform troubleshooting procedure. Failure to do so could result in death or serious injury.

Table C-3 - System and General Troubleshooting

Problem	Possible Cause	Remedy
Furnace will not start.	Thermostat not calling for heat	Check thermostat and adjust. Check thermostat for accuracy; if mercury switch type, it might be off level.
	No power to furnace	Check furnace switch, main electrical panel furnace fuse or circuit breaker. Look for any other hand operated switch, such as old poorly located furnace switch, which was not removed during furnace replacement.
	Thermostat faulty	Remove thermostat wires from oil primary control terminals T-T. Place a jumper across T-T. If furnace starts, replace thermostat, thermostat sub-base (if equipped), or both.
	Oil primary control faulty	Check reset button on oil primary control. Remove thermostat wires from oil primary control terminals T - T. Check for 24V across T -T. If no voltage is present, check for 115V to oil primary control. If 115V is present, refer to oil primary control documentation provided with oil burner.
	Photo Cell wiring shorted or room light leaking into photo cell compartment	Check photo cell (cad cell) wiring for short circuits. Check for room light leaking into cad cell compartment. Repair light leak if necessary.
	Open safety switch	Check for open limit or auxiliary limit. Check internal wiring connections; loose connectors, etc.
Furnace will not start without first pushing oil primary control reset button. (Happens on frequent basis)	No fuel oil	Check fuel oil supply. Check all hand operated fuel oil valves are in open position. Fill oil storage tank if necessary.
	Clogged nozzle	Replace nozzle with high quality replacement. Use rating plate or Tables in Appendix A as a guide.
	Clogged oil filter	Replace oil tank filter or in-line filter if used.
	Low oil pump pressure	Connect pressure gauge to oil pump. Adjust pump pressure, or replace oil pump if necessary. Verify erratic pressure readings are not caused by defective fuel oil line.
	Air getting into fuel oil lines, or fuel oil line dirty, clogged, or in some manner defective	Check fuel oil lines. Replace any compression fittings found with high quality flared fittings. Check for signs of oil leaks. Any oil leak is potential source of air or contaminants.
	Defective burner motor	Check burner motor. If burner motor is cutting out on over-load, determine why. Replace if necessary.

Table C-3: System and General Troubleshooting continued

Problem	Possible Cause	Remedy
Furnace starts, but cuts out requiring manually resetting oil protector reset button.	Photo Cell (Cad Cell) defective.	If cad cell is dirty, clean it. Determine why cad cell is getting dirty. If cad cell is poorly aimed, realign it. NOTE: Photocell should have resistance of 100 KΩ in absence of light; maximum of 1500 Ω in presence of light. Verify room light is not leaking into the cad cell compartment. (See diagnostic light section).
Furnace starts, but cuts out requiring manually resetting oil protector reset button.	No fuel oil.	Check fuel oil supply. Check that all hand operated fuel oil valves are in the open position. Fill oil storage tank if necessary.
	Clogged nozzle.	Replace nozzle with high quality replacement. Use rating plate or Tables in Appendix A as a guide.
	Clogged oil filter.	Replace oil tank filter or in-line filter if used.
	Low oil pump pressure.	Connect pressure gauge to oil pump. Adjust pump pressure, or replace oil pump if necessary. Verify erratic pressure readings are not caused by defective fuel oil line.
	Air getting into fuel oil lines, or fuel oil line dirty, clogged, or in some manner defective.	Check fuel oil lines. Replace any compression fittings found with high quality flared fittings. Check for any signs of oil leaks. Any oil leak is a potential source of air or contaminants.
	Defective burner motor.	Check burner motor. If burner motor is cutting out on over-load, determine why. Replace if necessary.
	Water or contaminants in oil.	Drain fuel oil storage tank; replace fuel oil. (Consult with fuel oil supplier).
	Frozen oil line.	Gently warm oil line. Insulate oil line. (Outdoor piping size may require increased diameter).
Oil burner sputtering at nozzle	Electrodes out of adjustment or defective.	Check electrode settings. Check electrodes for dirt build-up or cracks in porcelain.
	Poor igniter connections or defective igniter.	Check contacts between the igniter and electrodes. If OK, replace the igniter
	Fuel oil filter clogged.	Replace fuel oil storage tank filter and / or fuel oil in-line filter.
	Defective oil pump.	Check burner motor and / or fuel oil pump coupling. Check oil pump pressure. Replace fuel oil pump if necessary.
	Fuel oil line partially clogged or contains air.	Bleed air from oil line. If problem persists, replace oil line.
Excessive fuel oil consumption.	System temperature rise too high.	System temperature rise should not exceed 75°F. Check for clogged air filters. Check blower fan for excess dirt build-up or debris. Speed up blower fan if necessary.
	Poor "fan off" delay timing selection, (fan stops too soon).	Check "fan off" delay timing setting. Use duct thermometer in supply air plenum take-off or first few inches of supply air trunk duct. Fan should shut off at 90° - 100°F. Manipulate dip switch settings to come as close as possible to this "fan off" temperature.
	Fuel oil leak.	Check fuel oil line for leaks. Repair or replace if necessary.
	Stack temperature too high.	Check stack temperature. Stack temperatures will normally range from 400° to 500°F. Check draft regulator. Draft should be set to -0.02 in. w.c.
	Thermostat improperly adjusted or in poor location.	Check thermostat heat anticipator setting against measured amperage draw. Increase heat anticipator setting if necessary. If thermostat is being influenced by drafts, sunlight, duct work, etc., relocate to suitable location.

Table C-3: System and General Troubleshooting continued

Problem	Possible Cause	Remedy
Too much smoke.	Insufficient combustion air adjustment at oil burner, or improper draft pressure.	Adjust oil burner combustion air band and draft regulator to gain highest practical CO2 or lowest practical O2 content in flue gases. See Burner Set Up.
	Heat exchanger partially clogged.	Check for soot build-up in heat exchanger flue passages, especially in outer radiator.
Soot building up on blast tube (end coning).	Poor alignment between oil burner blast tube and fire pot.	Check alignment. Blast tube should be centered with fire pot burner opening. Oil burner head should be ¼ inch back from inside surface of fire pot.
	Flame impingement caused by Incorrect nozzle angle.	Check nozzle size and angle. (See Appendix A). Check distance from head to inside surface of fire pot.
	Defective fire-pot	Check fire-pot. Repair or replace.
Furnace will not warm home to desired temperature.	Airflow blocked or dirty air filter.	Clean or replace air filter.
	Thermostat adjustments or location.	Check thermostat heat anticipator setting against measured amperage draw. Increase heat anticipator setting if necessary. If thermostat is being influenced by drafts, sunlight, duct work, etc., relocate to suitable location.
	Insufficient airflow.	Check all dampers. Open closed dampers including registers in unused rooms. Check system temperature rise. If temperature rise is too high, speed up blower fan.
	Defective high limit control.	Test high limit function of all limit switches. Use duct thermometer to verify accuracy of limit control. Check for obstructions to airflow around limit switch bimetal elements. Replace control if necessary.
	Under-sized nozzle.	Check nozzle. If problem is not caused by air flow problems, use larger nozzle, if permitted by rating plate.
	Blower fan motor stopping intermittently on overload.	Check blower fan motor amperage draw. Check motor ventilation ports, clean if necessary. Replace motor if necessary.
	Burner motor stopping intermittently on overload.	Check burner motor. Replace if necessary.
Home does not heat evenly	Improper distribution of heat.	This is not likely to be a furnace problem. Balance duct system.
Supply air temperature too hot.	Airflow blocked or dirty air filter.	Clean or replace air filter.
	Insufficient airflow.	Check all dampers. Open closed dampers including registers in unused rooms. Check system temperature rise. If temperature rise is too high, speed up blower fan.
Supply air temperature too cool.	Excess airflow.	Check system temperature rise. Slow down blower fan if necessary.
	Excessive duct losses.	Check supply air ductwork. Seal leaky joints and seams. Insulate ductwork if necessary.
Supply air temperature too cool during first moments of furnace cycle.	Fan control "fan on" setting too low.	Increase "fan on" dipswitch settings on EFT if control has this option. Register air deflectors may help.
	Excessive duct losses.	Check supply air ductwork. Seal leaky joints and seams. Insulate ductwork if necessary.

Model No.	
Serial No.	
Date Installed	
Contractor	
Contact	
Address	
Postal Code	
Telephone No.	
After Hours No.	

Fuel Supplier

Fuel Oil Supplier	
Contact	
Telephone No.	
After Hours No.	

Parts Listing: Chimney Vent Models UMLA/UMLVA

Ref. No.	Description	Part No.
1	Right Side Panel Assembly	109009488AD
2	Left Side Panel Assembly	109009489AD
3	3/4" Flush Plugs (8 per unit)	240010828
4	Rear Panel Assembly	109009490AD
5	Upper Front Panel Assembly	109009491AD
6	Intermediate Front Panel Assembly w/PSC Blower Motor	109009495AD
	Intermediate Front Panel Assembly w/ECM Blower Motor	109009503AD
7	Blower Door	109009492AD
8	Door Handle	28673
9	Blower Division Panel Assembly	109009493
10	Internal Wire Retainer	109009402
11	Base Panel	109009487
12	Heat Exchanger Assembly (Includes 13, 17, 18)	550003028
13	Turbulators (18 per unit)	109009176
14	Observation Port Sight Glass	240008235
15	Sight Glass Washer	109009449
16	Flue Collar Assembly	550003007
17	Flue Collar Gasket (2 per unit)	240010371
18	Burner Plate Gasket	240010370
19	Right Side Air Baffle	109009186
20	Left Side Air Bafffle	109009187
21	Filter Frame	109009198
22	Filter Frame End Support	109009199
23	Filter Frame Closer	109009424
24	Limit Disc 60T11 BOF 220°F	28841
25	Limit Disc Retainer	109009401
26	Low Speed Fan Switch	20693
27	Blower Assembly - Direct Drive 1/2 HP PSC Motor (includes items 28-31)	550003026
	Blower Assembly - Direct Drive 1/2 ECM Motor (includes items ?)	550003027
	Blower Housing and wheel 100-10T DD	240010315
	Blower Motor, 1/2 HP, 4 Speed	102000131
	Blower Motor, 1/2 HP ECM, Programmed	102000185
	Motor Mounting Band TR5868	17811
	Motor Mount Arms 100-10T Blower (3 per unit)	26251
	Motor Run Capacitor 10 mfd @ 370 VAC	27743
	Capacitor Strap	27761
	Blower Slide Rail (2 per unit)	109009197
28	Control Box	109009497
29	Fan Timer Control 1158-120 UTEC for PSC Blower Motor	29388
	Fan Timer Control 1168-1 UTEC for ECM Blower Motor	240007048
30	Transformer 120-24VAC 40VA	240005330
31	Auxiliary Limit Disc 60T11 BOF 130°F	30388
32a	Oil Burner Assembly, Beckett AFG70MPSS 0.50-45°W Without Cover	550003079
	Oil Burner Assembly, Beckett AFG70MPSS 0.50-45°W With Cover	550003080
	Burner Motor 1/7 HP 3450 RPM PSC	1050008
	Beckett Clean-Cut Oil Pump A2EA6520	29688
	Solid State Ignitor	1050007
	Oil Primary Combustion Control Genisys 7505B1500	240008816
32b	Oil Burner, Riello 40F3 VSBT 0.55-80°B	550003081
32c	Oil Burner, Carlin EZ-LF 0.50-70°B	550003198
33	Limit Cover	109009498

Parts Listing: Chimney Vent Models UMLA/UMLVA - CONTINUED

Ref. No.	Description	Part No.
*	Wire Harness Transformer/Power Supply	29751
*	Wire Harness Fan Timer Board to Control Box (PSC)	240010810
*	Wire Harness to Blower (PSC)	240010812
*	Wire Harness to T-T (Order Separate for Beckett Burner Only, Furnished with Riello Burner)	240010961
*	Wire Harness Control Box to Intermediate Panel (PSC)	240010959
*	Wire Harness Intermediate Panel to Limit	240010960
*	Wire Harness ECM Blower Power	240005742
*	Wire Harness ECM Blower Control	240006438
*	Wire Harness Fan Timer to Control Box (ECM)	240010986
*	Wire Harness Control Box to Intermediate Panel (ECM)	240010987
*	Cover Kit for Beckett AFG Burner 5207301U	240010859
*	0.60-60°W Oil Nozzle	240007739
*	0.65-60°W Oil Nozzle	240006431
*	0.50-90°B Oil Nozzle	240010815
*	0.65-80°B Oil Nozzle	1320011
*	0.75-80°B Oil Nozzle	1320008
*	0.65-70°B Oil Nozzle	14619022
*	Blocked Vent Safety Switch Kit Complete	3002237
*	Blocked Vent Safety Switch - Replacement Switch Only	30660
*	Filter - Permanent - 16" x 20" x 1"	2180026
*	Draft Regulator	27494
*	Plug for Draft Measurement Port M10x16 Flange Bolt	240010827
*	Downflow Floor Base Kit	550003032
* = Not Shown		

Parts Listing: Direct Vent Models UMLA/UMLVA

Ref. No.	Description	Part No.
32d	Oil Burner Assembly, Riello 40BF3 0.55-80°B (0.55/0.65 USGPH Firing Rates)	550005124
32e	Oil Burner Assembly, Riello 40BF5 0.65-80°B (0.75/0.85 USGPH Firing Rates)	550005125
32f	Oil Burner Assembly, Beckett NX56LQ 0.50-60°W Without Burner Cover	550005126
32g	Oil Burner Assembly, Beckett NX56LQ 0.50-60°W With Burner Cover	550005127
*	Pressure Switch (Blocked Vent Safety Switch)	240011288
*	Appliance Adapter - Connects Vent Pipe to Furnace	240011289
*	Combustion Air Intake Collar 4" straight for Beckett Burner	109005950
*	Combustion Air Intake Collar 3" straight for Riello Burner	109006030
*	Combustion Air Intake Collar 3" Elbow for Riello Burner	3002333
*	Combustion Air Intake Increaser 3" x 4" for Riello Burner	240011310
*	4" x 10' Vent Kit (Includes Vent Terminal Connector and Ultra Copper Sealant)	240006909
*	4" x 15' Vent Kit (Includes Vent Terminal Connector and Ultra Copper Sealant)	240006910
*	4" x 20' Vent Kit (Includes Vent Terminal Connector and Ultra Copper Sealant)	240006911
*	4" Vent Terminal Connector - Connects Vent Pipe to Vent Terminal	240006914
*	Standard Vent Terminal	28972
*	Riser Vent Terminal	29231
* = Not Shown		

Model UMLA/UMLVA Diagram

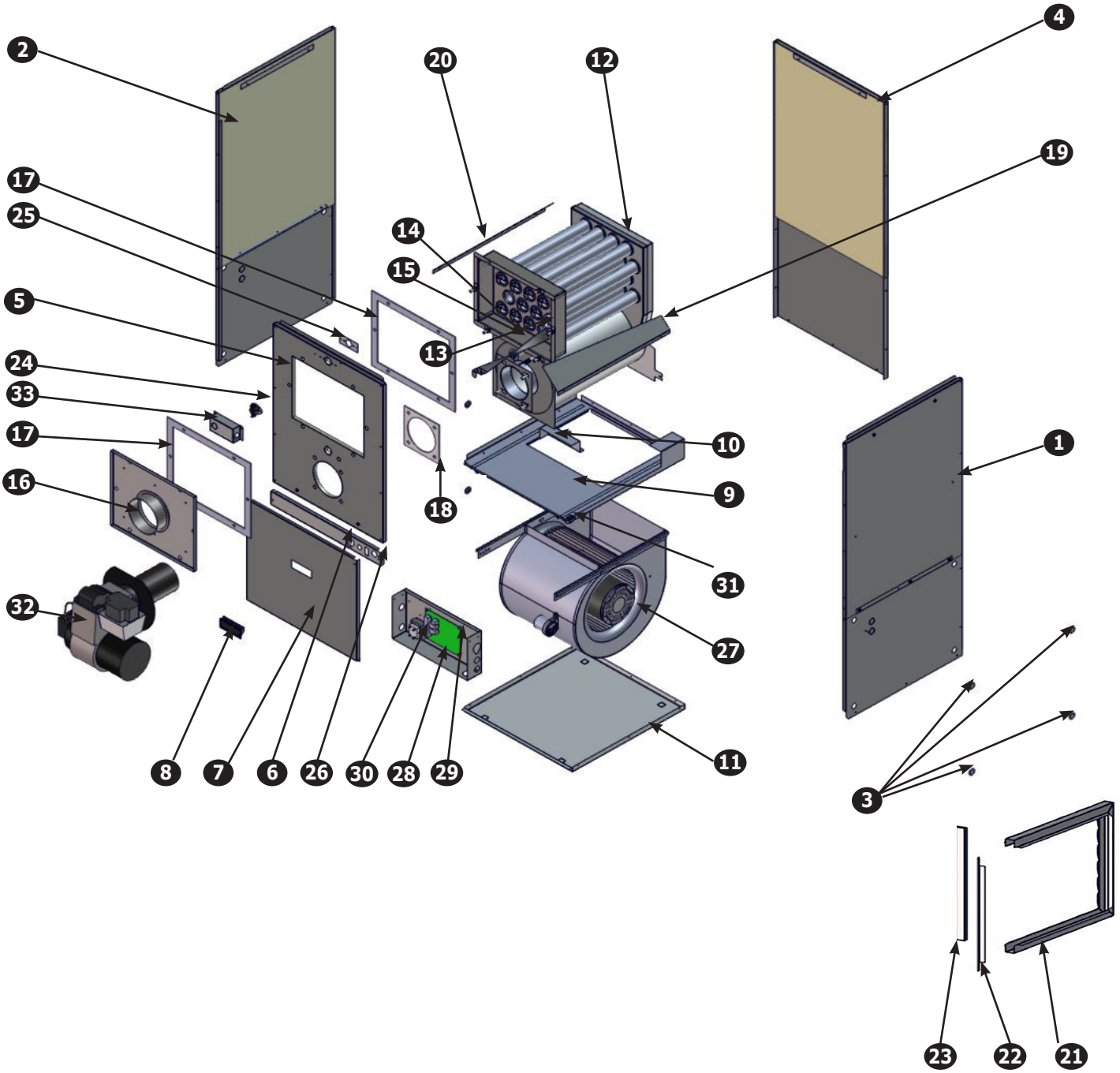

ECR International
2210 Dwyer Avenue, Utica NY 13501
web site: www.ecrinternational.com